REFCOOL
REFRIGERATION LTD

IN-RACK SERVER COOLERS

- Designed and Built In the U.K By Refcool

- Proven Reliable Technology

- Water or DX Designs Available

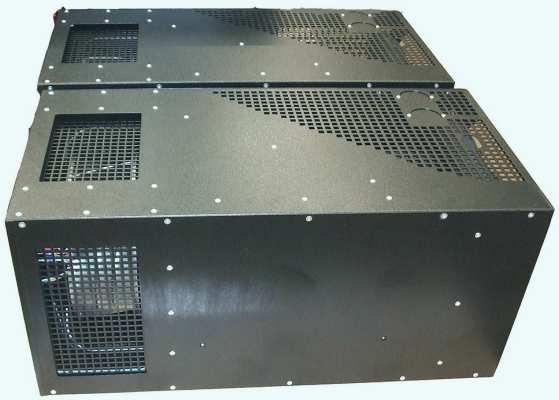

- Wide Range of cooling Capacities

- Installation and Service Support available

APPROVED PRODUCT MCS

REFCOM F-GAS CERTIFICATION

UVDB Registered

SYSTEM CERTIFICATION ISO 9001:2008 SGS

WELCOME TO REFCOOL

With over 30 years of experience in the industrial water chiller industry, we understand the demanding environment in which our clients operate, and the necessity for professional chilled water service to limit your production down time. Refcool believe that only through the promotion of high engineering standards can a cost effective service be delivered. Our approach is to work with our clients in longer term service management contracts to ensure we thoroughly understand our clients requirements and always present the correct engineering solution for their requirements.

OUR SERVICES

We are here to serve. Whether it be through a service inspections contract, or a preventative maintenance contract. These are designed to fulfil the twin objectives of fulfilling the legal requirement of the F gas Regulations and ensuring your cooling plant is running as efficiently as possible.

SERVICE & MAINTENANCE

Refcool Refrigeration(Refcool) is a UK based, privately owned specialist heat transfer, refrigeration and cooling company, trading since 1996. We have a well deserved reputation for servicing and maintenance work. This arises not only from the strong customer service ethic but also the depth of knowledge and expertise in providing cost effective solutions.

THE PRODUCTS

We have sourced a range of energy efficient cooling plant to cover the full spectrum of cooling requirements from Chillers, to closed loop Air Blast Coolers to Adiabatic Air Blast Coolers and Cooling Towers. Consideration in product selection will be given to running cost, global warming potential and efficiency as well as upfront capital cost.

OUR MANUFACTURING FACILITIES

Refcool Refrigeration is built on an engineering team comprising of both electrical and mechanical expertise, establishing an outstanding manufacturing facility. The company designs and manufacture small chillers and air blast heat exchangers and other cooling equipment for Original Equipment Manufacturers.

As experts in process cooling and heat transfer solutions, Refcool engages with major OEM and blue chip clients in developing tailored solutions backed up by contract manufacturing supply agreements. Its practical engineering approach, supported by advanced design capabilities, ensures energy efficiency and cost effectiveness are trademarks by which Refcool is recognised.

Where a standard or tailored standard unit is not sufficient, Refcool can offer a bespoke design and manufacturing service to maximise added product efficiency

REFCOOL
REFRIGERATION LTD

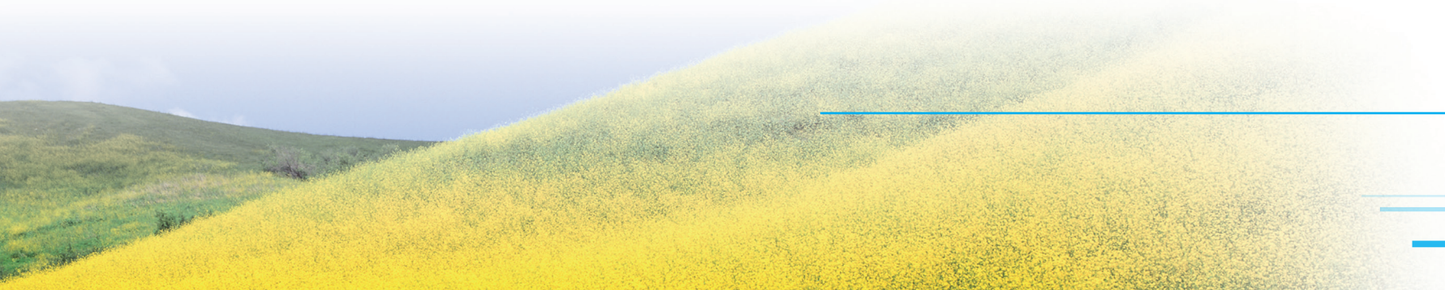

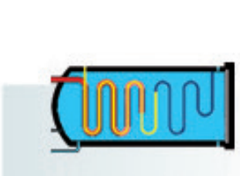

IN-RACK SERVER COOLERS

FULL WIDTH 800 WIDE

Available in 35kW and 75kW modules, Dx or Chilled Water

Expandable microprocessor for additional sensors & functions

Cabinet door mounted or remote air on / air off sensors

Fan coil modules mount in 800 wide cabinet

Separate control module with rack mount capability

Hot swappable fan cassettes

Modulating cooling fluid control valve

Modulating fan speed control

Cooling fluid flow setter

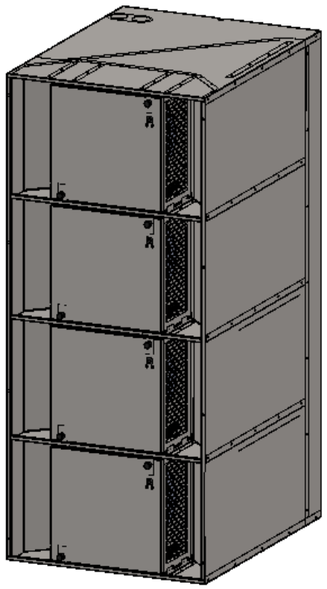

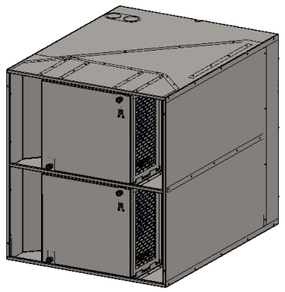

19” CABINET MOUNTED

Available in 10kW, 30kW and 60kW modules, Dx or Chilled Water

Expandable microprocessor for additional sensors & functions

Separate control module with 19” rack mount capability

Cabinet door mounted or remote air on / air off sensors

Fan coil modules mount between 19” vertical rail

Modulating cooling fluid control valve

Modulating fan speed control

Hot swappable fan cassettes

Cooling fluid flow setter

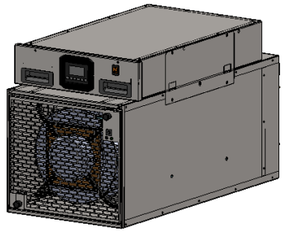

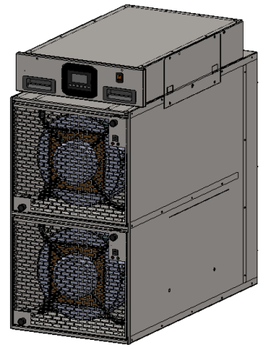

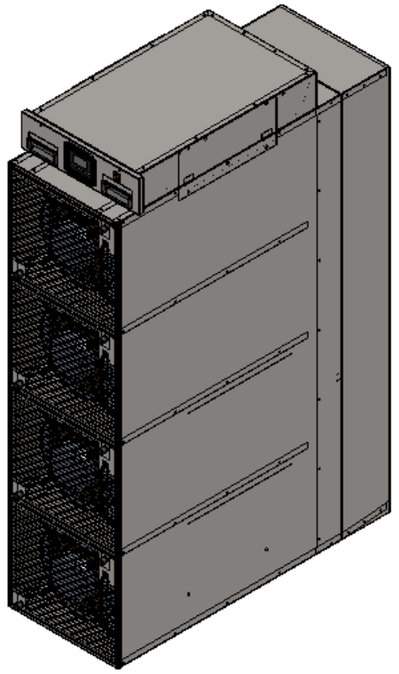

SPECIFICATION

RR1012-AB-902749-01
10kW Modular High Density Server Cooler
Water Cooled Fan Coil Module

REFCOOL REFRIGERATION LTD

Unit 6 Swanwick Business Park,
Bridge Road,
Southampton,
SO31 7GB

(Requires Separate Control Module)

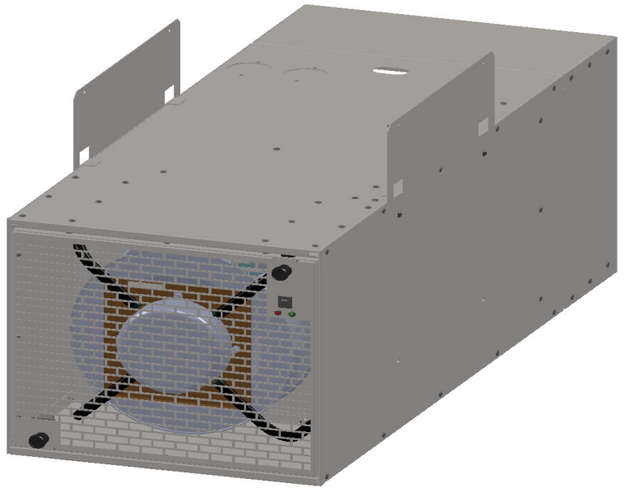

General Description	The 10kW Modular High Density Server Cooler module has been designed to fit IT data cabinet systems. It is narrow enough to not encroach upon the vertical 'U' mounting rails in data cabinets. The unit is 100% sensible but has facilities for condensate drainage to allow for initial run up. The unit consists of one 10kW independent fan coil module with 1 hot swappable fan and one coil. The fan coil module is controlled by a separate control module that can be positioned in the same cabinet with the fan coil module or idependently in a nearby location (19" rack mounting if required).

Design Criteria	Nominal Duty	10kW
	Air Flow	0.85m³/s
	Air Temp	40ºC
	Air On r.h.	15%
	Water On	10.5ºC
	Water Off	16ºC
	Water Flow	0.46 l/s
	Fluid	Water/ 25% Eth Glycol
	Air Off	30ºC
	Air Off r.h.	40%

Heat Exchanger	Type	Finned Coil
	Nominal Capacity	10kW
	Qty.	1
	Material	Aluminium Fins; Copper Tubes; Galvanised Steel Case
	Coating	All Galv. To be Painted to Prevent Feathering

Mixing Valve	Type	2-Way Modulating Spring Return
	Qty.	1
	Size	3/4" 6.3kvs
	Valve Material	Brass
	Actuator	Spring Return

Flow Regulator	Type	Taconova Balancing valve DN32 20-70 LPM
	Qty.	1
	Size	1 1/4"
	Material	Brass

Fans	Type	EC High Efficiency Backward Curved Centrifugal
	Qty.	1
	Mounting	Individual Hot Swappable Modules
	Nominal Power	0.38kW
	Voltage	200 - 277V / 1 ph / 50/60Hz
	Control Input	0 - 10VDC / PWM

Connections Water	Flow	1" BSPM
	Return	1" BSPM
	Drain	15MM CU Stub

Electrical Details	RLA	3.1A Approx.
	Unit Voltage	220 - 240V 1Ph 50Hz
	Power Lead	C19 Connector

Monitoring / Alarms	Air On	Thermocouple Type T (On Lead for Cabinet Door Mounting)
	Air Off	Thermocouple Type T (On Lead for Cabinet Door Mounting)
	Water On	Thermocouple Type T
	Water Off	Thermocouple Type T
	Valve Position	0 - 10V Signal
	Fan Speed	0 - 10VDC Output Converted to RPM
	Fan Fail	Via Built - in Alarm Relay

Connections Electrical	Fan Coil Module	Hartings 32 Pin Positive Location
		On 5m Flying Lead

Dimensions	Height	9U
	Width	445mm
	Depth	920mm
	Weight	90kg
	Material	Galvanised Sheet Steel - All Painted
	Colour	RAL9005 - Black

Documentation	GA Drawing	D902749-101
	PI&D Drawing	D902749-102
	Manual	Installation & Operation Manual
	Labels	Unit Labels in English

Standards & Codes	Low Voltage Directive	**2006/95/EC**, Low Voltage Directive
	Harmonised Stds.	**BS EN 61000-6-3:2007+A1:2011,** Electromagnetic compatibility (EMC). Generic standards. Emission
		BS EN 61000-6-1:2007, Electromagnetic compatibility (EMC). Generic standards. Immunity
		BS EN 60204-1:2006+A1:2009, Safety of machinery. Electrical equipment of machines. General requirements
	PED	**97/23/EC**, Pressure Equipment Directive: In accordance with Module 'Sound Engineering Practice'

Issue		2
Date		11/04/2013
By		S.Winborn
Change		Thermocouples were NTC Probes

SPECIFICATION

RR1013-AB-902745-01
30kW Modular High Density Server Cooler
Fan Coil Module

(Requires Separate Control Module)

REFCOOL REFRIGERATION LTD
Unit 6 Swanwick Business Park,
Bridge Road,
Southampton,
SO31 7GB

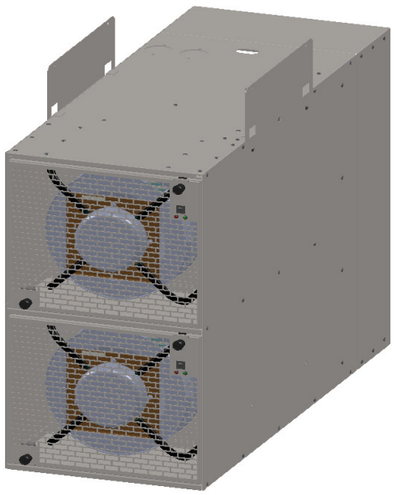

General Description	The 30kW modular High Density Server Cooler module has been designed to fit IT data cabinet systems. It is narrow enough to not encroach upon the vertical 'U' mounting rails in data cabinets. The unit is 100% sensible but has facilities for condensate drainage to allow for initial run up. The unit consists of one 30kW independent fan coil module with 2 hot swappable fans and one coil. The fan coil module is controlled by a separate control module that can be positioned in the same cabinet with the fan coil module or idependently in a nearby location (19" rack mounting if required).	

Design Criteria	Nominal Duty	30kW
	Air Flow	1.7m³/s
	Air Temp	40ºC
	Air On r.h.	15%
	Water On	10.5ºC
	Water Off	16ºC
	Water Flow	1.39 l/s
	Fluid	Water/ 25% Eth Glycol
	Air Off	25ºC
	Air Off r.h.	40%

Heat Exchanger	Type	Finned Coil
	Nominal Capacity	30kW
	Qty.	1
	Material	Aluminium Fins; Copper Tubes; Galvanised Steel Case
	Coating	All Galv. To be Painted to Prevent Feathering

Mixing Valve	Type	2-Way Modulating Spring Return
	Qty.	1
	Size	1" 16kvs
	Valve Material	Brass
	Actuator	Spring Return

Flow Regulator	Type	Taconova Balancing valve DN40 30-110 LPM
	Qty.	1
	Size	1 1/22
	Material	Brass

Fans	Type	EC High Efficiency Backward Curved Centrifugal
	Qty.	2
	Mounting	Individual Hot Swappable Modules
	Nominal Power	0.38kW
	Voltage	200 - 277V / 1 ph / 50/60Hz
	Control Input	0 - 10VDC / PWM

Connections Water	Flow	1" BSPM
	Return	1" BSPM
	Drain	15MM CU Stub

Electrical Details	RLA	6.2A Approx.
	Unit Voltage	220 - 240V 1Ph 50Hz
	Power Lead	C19 Connector

Monitoring / Alarms	Air On	Thermocouple Type T (On Lead for Cabinet Door Mounting)
	Air Off	Thermocouple Type T (On Lead for Cabinet Door Mounting)
	Water On	Thermocouple Type T
	Water Off	Thermocouple Type T
	Valve Position	0 - 10V Signal
	Fan Speed	0 - 10VDC Output Converted to RPM
	Fan Fail	Via Built - in Alarm Relay

Connections Electrical	Fan Coil Module	Hartings 32 Pin Positive Location
		On 5m Flying Lead

Dimensions	Height	18U
	Width	445mm
	Depth	920mm
	Weight	180kg
	Material	Galvanised Sheet Steel - All Painted
	Colour	RAL9005 - Black

Documentation	GA Drawing	D902745-101
	PI&D Drawing	D902745-102
	Manual	Installation & Operation Manual
	Labels	Unit Labels in English

Standards & Codes	Low Voltage Directive	**2006/95/EC**, Low Voltage Directive
	Harmonised Stds.	**BS EN 61000-6-3:2007+A1:2011,** Electromagnetic compatibility (EMC). Generic standards. Emission
		BS EN 61000-6-1:2007, Electromagnetic compatibility (EMC). Generic standards. Immunity
		BS EN 60204-1:2006+A1:2009, Safety of machinery. Electrical equipment of machines. General requirements
	PED	**97/23/EC**, Pressure Equipment Directive: In accordance with Module 'Sound Engineering Practice'

Issue		2
Date		11/04/2013
By		S.Winborn
Change		Thermocouples were NTC Probes

SPECIFICATION

RR1020-AB-902750-01

35kW Modular High Density Server Cooler (Full Width)

Fan Coil Module

REFCOOL REFRIGERATION LTD

Unit 6 Swanwick Business Park,
Bridge Road,
Southampton,
SO31 7GB

(Requires Separate Control Module)

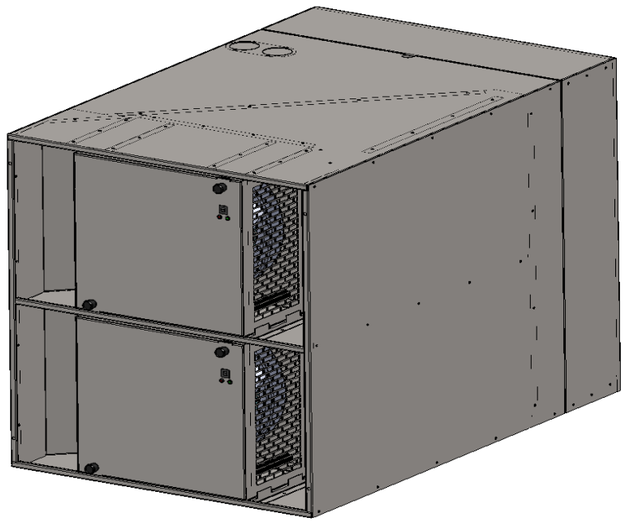

General Description	The 'full width' 35kW modular High Density Server Cooler module has been designed to fit IT data cabinet systems. It is sized to fit 800mm wide data cabinets. The unit is 100% sensible but has facilities for condensate drainage to allow for initial run up. The unit consists of one 35kW independent fan coil module with 2 hot swappable fans and one coil. The fan coil module is controlled by a separate control module that can be positioned in the same cabinet with the fan coil module or idependently in a nearby location (19" rack mounting if required). The control module and it's intelligent control software is configured to allow the plug and play addition of a further two 35kW fan coil modules.	

Design Criteria	Nominal Duty	35kW
	Air Flow	1.7m³/s
	Air Temp	40ºC
	Air On r.h.	15%
	Water On	10.5ºC
	Water Off	16ºC
	Water Flow	1.65 l/s
	Fluid	Water/ 25% Eth Glycol
	Air Off	25ºC
	Air Off r.h.	40%

Heat Exchanger	Type	Finned Coil
	Nominal Capacity	35kW
	Qty.	1
	Material	Aluminium Fins; Copper Tubes; Galvanised Steel Case
	Coating	All Galv. To be Painted to Prevent Feathering

Mixing Valve	Type	2-Way Modulating Spring Return
	Qty.	1
	Size	1" 16kvs
	Valve Material	Brass
	Actuator	Spring Return

Flow Regulator	Type	Taconova Balancing valve DN40 30-110 LPM
	Qty.	1
	Size	1 1/22
	Material	Brass

Fans	Type	EC High Efficiency Backward Curved Centrifugal
	Qty.	2
	Mounting	Individual Hot Swappable Modules
	Nominal Power	0.38kW
	Voltage	200 - 277V / 1 ph / 50/60Hz
	Control Input	0 - 10VDC / PWM

Connections Water	Flow	1" BSPM
	Return	1" BSPM
	Drain	15MM CU Stub

Electrical Details	RLA	6.2A Approx.
	Unit Voltage	220 - 240V 1Ph 50Hz
	Power Lead	C19 Connector

Monitoring / Alarms	Air On	Thermocouple Type T (On Lead for Cabinet Door Mounting)
	Air Off	Thermocouple Type T (On Lead for Cabinet Door Mounting)
	Water On	Thermocouple Type T
	Water Off	Thermocouple Type T
	Valve Position	0 - 10V Signal
	Fan Speed	0 - 10VDC Output Converted to RPM
	Fan Fail	Via Built - in Alarm Relay

Connections Electrical	Fan Coil Module	Hartings 32 Pin Positive Location
		On 5m Flying Lead

Dimensions	Height	18U
	Width	730mm
	Depth	920mm
	Weight	180kg
	Material	Galvanised Sheet Steel - All Painted
	Colour	RAL9005 - Black

Documentation	GA Drawing	D902750-101
	PI&D Drawing	D902750-102
	Manual	Installation & Operation Manual
	Labels	Unit Labels in English

Standards & Codes	Low Voltage Directive	**2006/95/EC**, Low Voltage Directive
	Harmonised Stds.	**BS EN 61000-6-3:2007+A1:2011,** Electromagnetic compatibility (EMC). Generic standards. Emission
		BS EN 61000-6-1:2007, Electromagnetic compatibility (EMC). Generic standards. Immunity
		BS EN 60204-1:2006+A1:2009, Safety of machinery. Electrical equipment of machines. General requirements
	PED	**97/23/EC**, Pressure Equipment Directive: In accordance with Module 'Sound Engineering Practice'

Issue		1
Date		01/07/2013
By		S.Winborn
Change		First Issue

SPECIFICATION

RR1019-AB-902779-01
60kW Modular High Density Server Cooler
Fan Coil Module

REFCOOL REFRIGERATION LTD

Unit 6 Swanwick Business Park,
Bridge Road,
Southampton,
SO31 7GB

(Requires Separate Control Module)

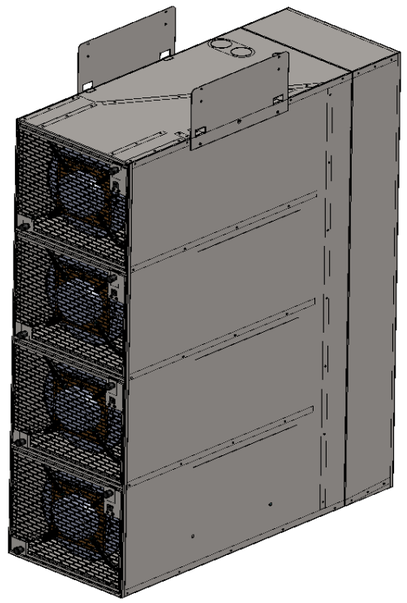

General Description	The 60kW modular High Density Server Cooler module has been designed to fit IT data cabinet systems. It is narrow enough to not encroach upon the vertical 'U' mounting rails in data cabinets. The unit is 100% sensible but has facilities for condensate drainage to allow for initial run up. The unit consists of one 60kW independent fan coil module with 4 hot swappable fans and one coil. The fan coil module is controlled by a separate control module that can be positioned in the same cabinet with the fan coil module or idependently in a nearby location (19" rack mounting if required).	

Design Criteria	Nominal Duty	60kW
	Air Flow	3.4m³/s
	Air Temp	40ºC
	Air On r.h.	15%
	Water On	10.5ºC
	Water Off	16ºC
	Water Flow	2.79 l/s
	Fluid	Water/ 25% Eth Glycol
	Air Off	25ºC
	Air Off r.h.	40%

Heat Exchanger	Type	Finned Coil
	Nominal Capacity	60kW
	Qty.	1
	Material	Aluminium Fins; Copper Tubes; Galvanised Steel Case
	Coating	All Galv. To be Painted to Prevent Feathering

Mixing Valve	Type	2-Way Modulating Spring Return
	Qty.	1
	Size	1 1/2" 25kvs
	Valve Material	Brass
	Actuator	Spring Return

Flow Regulator	Type		Taconova Balancing valve DN50 50-200 LPM
	Qty.		1
	Size		2"
	Material		Brass

Fans	Type	EC High Efficiency Backward Curved Centrifugal
	Qty.	4
	Mounting	Individual Hot Swappable Modules
	Nominal Power	0.38kW
	Voltage	200 - 277V / 1 ph / 50/60Hz
	Control Input	0 - 10VDC / PWM

Connections Water	Flow	1 1/2" BSPM
	Return	1 1/2" BSPM
	Drain	15MM CU Stub

Electrical Details	RLA	12.4A Approx.
	Unit Voltage	220 - 240V 1Ph 50Hz
	Power Lead	C19 Connector

Monitoring / Alarms	Air On	Thermocouple Type T (On Lead for Cabinet Door Mounting)
	Air Off	Thermocouple Type T (On Lead for Cabinet Door Mounting)
	Water On	Thermocouple Type T
	Water Off	Thermocouple Type T
	Valve Position	0 - 10V Signal
	Fan Speed	0 - 10VDC Output Converted to RPM
	Fan Fail	Via Built - in Alarm Relay

Connections Electrical	Fan Coil Module	2x Hartings 32 Pin Positive Location On 5m Flying Lead

Dimensions	Height	36U
	Width	445mm
	Depth	920mm
	Weight	360kg
	Material	Galvanised Sheet Steel - All Painted
	Colour	RAL9005 - Black

Documentation	GA Drawing	D902779-101
	PI&D Drawing	D902779-102
	Manual	Installation & Operation Manual
	Labels	Unit Labels in English

Standards & Codes	Low Voltage Directive	**2006/95/EC**, Low Voltage Directive
	Harmonised Stds.	**BS EN 61000-6-3:2007+A1:2011,** Electromagnetic compatibility (EMC). Generic standards. Emission
		BS EN 61000-6-1:2007, Electromagnetic compatibility (EMC). Generic standards. Immunity
		BS EN 60204-1:2006+A1:2009, Safety of machinery. Electrical equipment of machines. General requirements
	PED	**97/23/EC**, Pressure Equipment Directive: In accordance with Module 'Sound Engineering Practice'

Issue		1
Date		27/06/2013
By		S.Winborn
Change		First Issue

SPECIFICATION

RR1021-AB-902791-01

75kW Modular High Density Server Cooler (Full Width)

Fan Coil Module

REFCOOL REFRIGERATION LTD

Unit 6 Swanwick Business Park,
Bridge Road,
Southampton,
SO31 7GB

(Requires Separate Control Module)

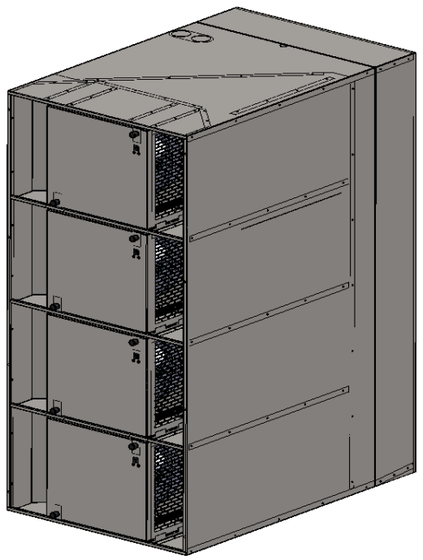

General Description	The 'full width' 75kW modular High Density Server Cooler module has been designed to fit IT data cabinet systems. It is sized to fit 800mm wide data cabinets. The unit is 100% sensible but has facilities for condensate drainage to allow for initial run up. The unit consists of one 75kW independent fan coil module with 4 hot swappable fans and one coil. The fan coil module is controlled by a separate control module that can be positioned in the same cabinet with the fan coil module or idependently in a nearby location (19" rack mounting if required). The control module and it's intelligent control software is configured to allow the plug and play addition of a further 35kW fan coil module.

Design Criteria	Nominal Duty	75kW
	Air Flow	3.4m³/s
	Air Temp	40ºC
	Air On r.h.	15%
	Water On	10.5ºC
	Water Off	16ºC
	Water Flow	3.63 l/s
	Fluid	Water/ 25% Eth Glycol
	Air Off	25ºC
	Air Off r.h.	40%

Heat Exchanger	Type	Finned Coil
	Nominal Capacity	75kW
	Qty.	1
	Material	Aluminium Fins; Copper Tubes; Galvanised Steel Case
	Coating	All Galv. To be Painted to Prevent Feathering

Mixing Valve	Type	2-Way Modulating Spring Return
	Qty.	1
	Size	1 1/2" 25kvs
	Valve Material	Brass
	Actuator	Spring Return

Flow Regulator	Type	Taconova Balancing valve DN50 50-200 LPM
	Qty.	1
	Size	2"
	Material	Brass

Fans	Type	EC High Efficiency Backward Curved Centrifugal
	Qty.	4
	Mounting	Individual Hot Swappable Modules
	Nominal Power	0.38kW
	Voltage	200 - 277V / 1 ph / 50/60Hz
	Control Input	0 - 10VDC / PWM

Connections Water	Flow	1 1/2" BSPM
	Return	1 1/2" BSPM
	Drain	15MM CU Stub

Electrical Details	RLA	12.4A Approx.
	Unit Voltage	220 - 240V 1Ph 50Hz
	Power Lead	C19 Connector

Monitoring / Alarms	Air On	Thermocouple Type T (On Lead for Cabinet Door Mounting)
	Air Off	Thermocouple Type T (On Lead for Cabinet Door Mounting)
	Water On	Thermocouple Type T
	Water Off	Thermocouple Type T
	Valve Position	0 - 10V Signal
	Fan Speed	0 - 10VDC Output Converted to RPM
	Fan Fail	Via Built - in Alarm Relay

Connections Electrical	Fan Coil Module	2x Hartings 32 Pin Positive Location On 5m Flying Lead

Dimensions	Height	36U
	Width	730mm
	Depth	920mm
	Weight	360kg
	Material	Galvanised Sheet Steel - All Painted
	Colour	RAL9005 - Black

Documentation	GA Drawing	D902791-101
	PI&D Drawing	D902791-102
	Manual	Installation & Operation Manual
	Labels	Unit Labels in English

Standards & Codes	Low Voltage Directive	**2006/95/EC**, Low Voltage Directive
	Harmonised Stds.	**BS EN 61000-6-3:2007+A1:2011,** Electromagnetic compatibility (EMC). Generic standards. Emission **BS EN 61000-6-1:2007,** Electromagnetic compatibility (EMC). Generic standards. Immunity **BS EN 60204-1:2006+A1:2009,** Safety of machinery. Electrical equipment of machines. General requirements
	PED	**97/23/EC**, Pressure Equipment Directive: In accordance with Module 'Sound Engineering Practice'

Issue		1
Date		01/07/2013
By		S.Winborn
Change		First Issue

SPECIFICATION

RR1014-AB-902748-01
Modular High Density Server Cooler
Universal Fan Control Module

REFCOOL REFRIGERATION LTD
Unit 6 Swanwick Business Park,
Bridge Road,
Southampton,
SO31 7GB

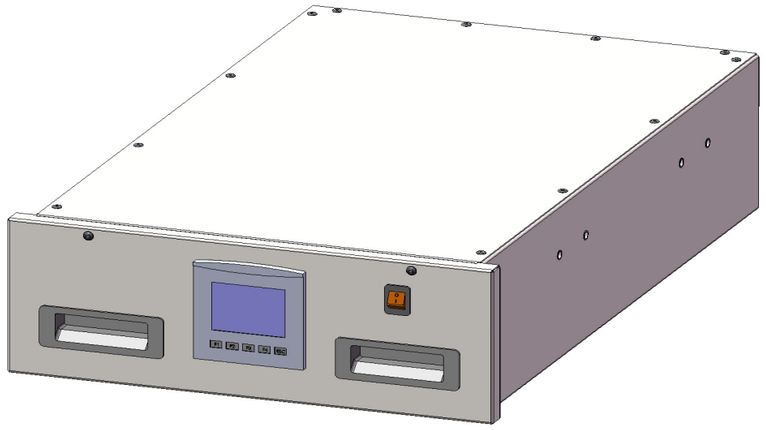

General Description	The Universal Fan Control Module has been designed to control and run Modular high Density Server Cooler Fan Coil modules . It is a 4U module that can be rack mounted (up to 5m away from the Fan Coil Modules) or mounted directly to the top of the Fan Coil Modules. In the unlikely event of a failure, the Universal Control Module has been designed to be swapped out in less than a minute. The Universal Control Module and it's intelligent control software is configured to allow the 'plug and play' of up to 4 Fan Coil Modules from the range.

Possible Fan Coil Module Configurations					
	10kW		**30kW**		**60kW**
	1	&	3	or	1
	2	&	2	or	1
	3	&	1	or	0
Note 60kW has 2x Harting plugs	4	&	0	or	0
	30kW		**10kW**		**60kW**
	1	&	3	or	1
	2	&	2	or	1
	3	&	1	or	0
	4	&	0	or	0
	60kW		**10kW**		**30kW**
	1	&	2	or	2
	2	&	0	or	0

Electrical	Mains Supply	230V / 1ph / 50Hz
	Current	See Fan Coil Module Data Sheets

Controls	Type	Unitronics V350 PLC with built in HMI
	Communications	MODBUS

Monitoring / Alarms (per Module)	Air On	Thermocouple Type T
	Air Off	Thermocouple Type T
	Water On	Thermocouple Type T
	Water Off	Thermocouple Type T
	Valve Position	0 - 10V Signal
	Fan Speed	0 - 10VDC Output Converted to RPM
	Fan Fail	Via Built - in Alarm Relay

Connections	Fan Coil Module 1	Hartings 32 pin positive location
	Fan Coil Module 2	Hartings 32 pin positive location
	Fan Coil Module 3	Hartings 32 pin positive location
	Fan Coil Module 4	Hartings 32 pin positive location
	MODBUS Port	RJ45
	PLC Programing	RJ11
	Power	C20 Socket 16A Qty 2

Dimensions Control Module	Height	4U
	Width	445mm
	Depth	750mm (excluding Hartings plugs)
	Weight	35kg
	Material	Galvanised Sheet Steel - All Painted
	Colour	RAL9005 - Black

Documentation	GA Drawing	D902748-101
	Manual	Installation & Operation Manual
	Labels	Unit Labels in English

Standards & Codes	Low Voltage Directive	**2006/95/EC**, Low Voltage Directive
	Harmonised Stds.	**BS EN 61000-6-3:2007+A1:2011,** Electromagnetic compatibility (EMC). Generic standards. Emission
		BS EN 61000-6-1:2007, Electromagnetic compatibility (EMC). Generic standards. Immunity
		BS EN 60204-1:2006+A1:2009, Safety of machinery. Electrical equipment of machines. General requirements

Issue		2
Date		11/04/2013
By		S.Winborn
Change		Thermocouples were NTC Probes, Power connectors qty 2

SPECIFICATION

RR1018-AB-902748-02
Modular High Density Server Cooler
Universal Fan Control Module - 2 Coil Module

REFCOOL REFRIGERATION LTD

Unit 6 Swanwick Business Park,
Bridge Road,
Southampton,
SO31 7GB

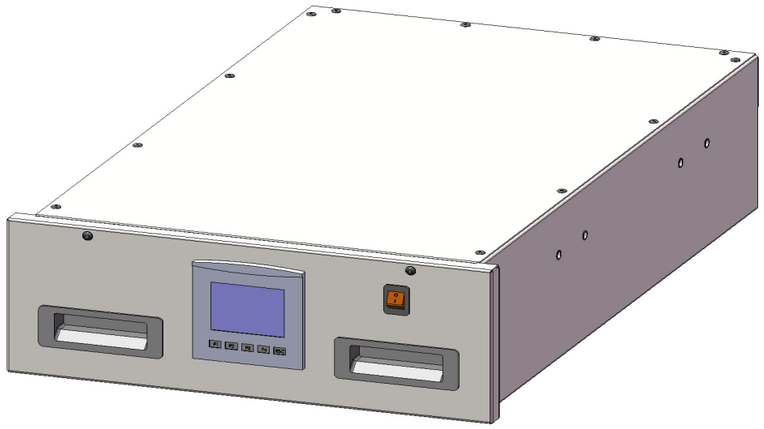

General Description	The Universal Fan Control Module has been designed to control and run Modular high Density Server Cooler Fan Coil modules . It is a 4U module that can be rack mounted (up to 5m away from the Fan Coil Modules) or mounted directly to the top of the Fan Coil Modules. In the unlikely event of a failure, the Universal Control Module has been designed to be swapped out in less than a minute. The Universal Control Module and it's intelligent control software is configured to allow the 'plug and play' of up to 2 Fan Coil Modules from the range.	

Possible Fan Coil Module Configurations	**10kW**		**30kW**		**60kW**
	1	&	1	or	0
	2	&	0	or	0
Note 60kW has 2x Harting plugs					
	30kW		**10kW**		**60kW**
	1	&	1	or	0
	2	&	0	or	0
	60kW		**10kW**		**30kW**
	1	&	0	or	0

Electrical	Mains Supply	230V / 1ph / 50Hz
	Current	See Fan Coil Module Data Sheets

Controls	Type	Unitronics V350 PLC with built in HMI
	Communications	MODBUS

Monitoring / Alarms (per Module)	Air On	Thermocouple Type T
	Air Off	Thermocouple Type T
	Water On	Thermocouple Type T
	Water Off	Thermocouple Type T
	Valve Position	0 - 10V Signal
	Fan Speed	0 - 10VDC Output Converted to RPM
	Fan Fail	Via Built - in Alarm Relay

Connections	Fan Coil Module 1	Hartings 32 pin positive location
	Fan Coil Module 2	Hartings 32 pin positive location
	MODBUS Port	RJ45
	PLC Programing	RJ11
	Power	C20 Socket 16A Qty 1

Dimensions Control Module	Height	4U
	Width	445mm
	Depth	750mm (excluding Hartings plugs)
	Weight	30kg
	Material	Galvanised Sheet Steel - All Painted
	Colour	RAL9005 - Black

Documentation	GA Drawing	D902748-201
	Manual	Installation & Operation Manual
	Labels	Unit Labels in English

Standards & Codes	Low Voltage Directive	**2006/95/EC**, Low Voltage Directive
	Harmonised Stds.	**BS EN 61000-6-3:2007+A1:2011,** Electromagnetic compatibility (EMC). Generic standards. Emission
		BS EN 61000-6-1:2007, Electromagnetic compatibility (EMC). Generic standards. Immunity
		BS EN 60204-1:2006+A1:2009, Safety of machinery. Electrical equipment of machines. General requirements

Issue		1
Date		25/06/2013
By		S.Winborn
Change		First Issue

YOUR SOLUTION

REFCOOL

REFRIGERATION LTD

Tel: +44 (0) 845 0953 200

Fax: +44 (0) 1489 797 200

Email: Info@refcool.co.uk

Registered Address:
Unit 6,
Swanwick Business Park,
Bridge Road,
Southampton,
SO31 7GB